PRECAST Concrete Products
8650 Box Rd.
Shreveport, LA 71106
Phone: 318-869-2085
Fax: 318-869-2098
800-456-1970

DESIGN & CONSTRUCTION NOTES

1. PRECAST M.H. IS DESIGNED TO ASTM-C-478-88A
2. 5,000 PSI CONCRETE IN 28 DAYS.
3. REINFORCING STEEL DEFORMED BARS CONFORMING TO ASTM SPECIFICATION A615.
4. REINFORCING STEEL WELDED WIRE FABRIC CONFORMS TO ASTM SPECIFICATION A1875.
5. ALL JOINTS SEAL WITH PRESS-SEAL G4 GASKETS
6. INTERIOR COATED WITH COAL TAR EPOXY 12-14 MILS.
   EXTERIOR COATED WITH BITUMINOUS COATING 10 MILS.
7. CRYSTALLINE MIX ADDITIVE

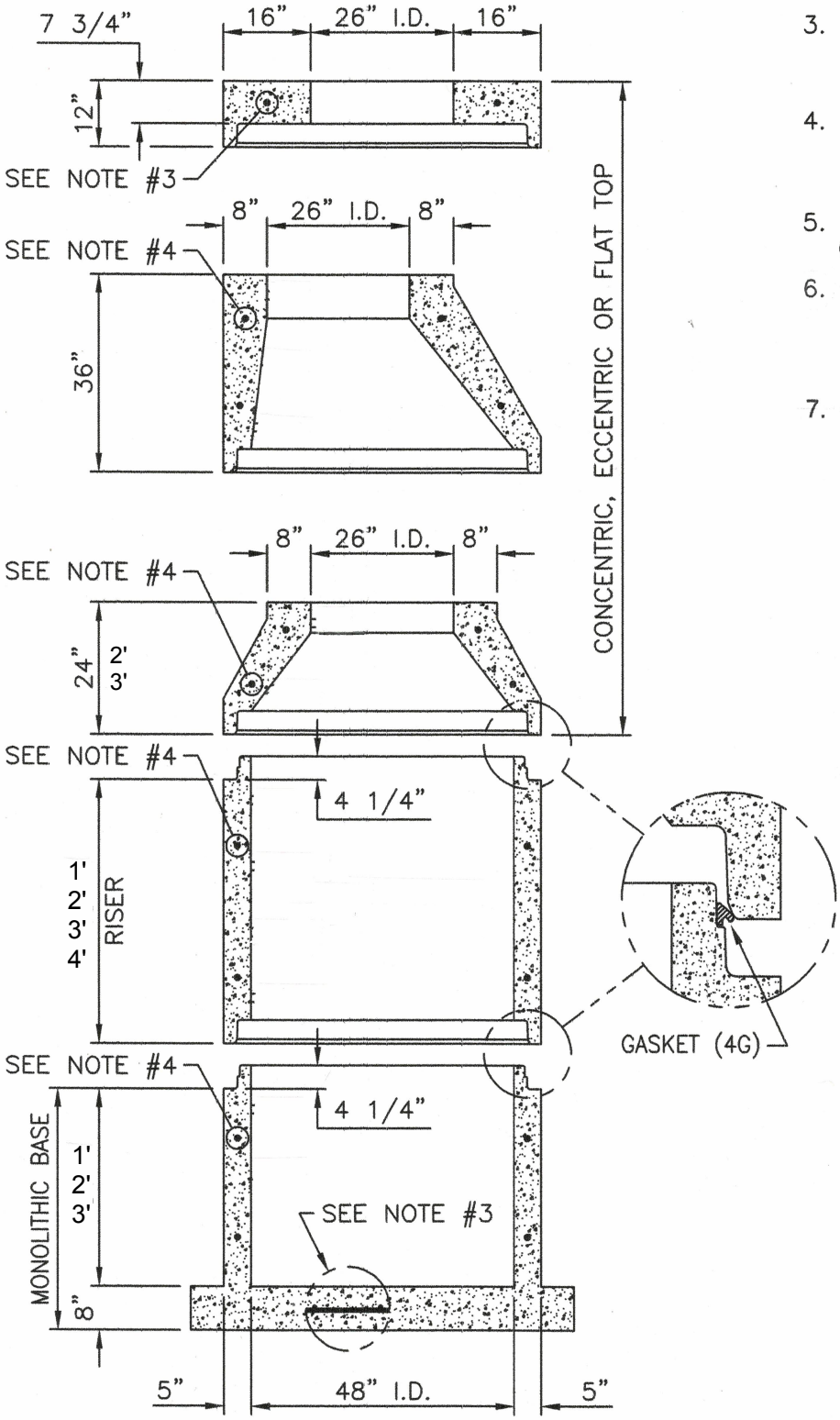

MANHOLE ASSEMBLY

48"ø M.H. ASSEMBLY	
DRAWN BY: KWD	APP'D BY: SN
DATE: 1/4/07	SCALE: 3/8"=1'-0"